LIVILITI
HEALTH PRODUCTS

Paptizer 360 User Manual

Included Parts:

- Paptizer 360
- Power Supply
- Tray
- Suction for tray

Always follow manufacturer's guidelines for daily and weekly cleaning of your CPAP equipment. This device must not be used to replace the cleaning procedures as recommended by the CPAP mask and hose manufacturers.

Warnings and Precautions

When using electrical products, especially when children are present, basic safety precautions should always be followed, including the following:

Use the Paptizer 360 only as directed in this user manual. If the Paptizer 360 is not functioning according to user manual specifications, stop usage and contact customer service immediately. Failure to use the Paptizer 360 as directed could result in illness or injury.

If the UVC LED lights do not automatically turn off when the lid is opened, close the lid and remove power from the machine. Contact customer service before attempting to use the Paptizer 360 again. Do not expose to eyes or skin. UV exposure could result in damage to eyes or skin.

Do not put liquids in or near the Paptizer 360 or its parts. Store the Paptizer 360 in an area away from moisture or water leaks. If water damage occurs, stop usage and contact customer service. Failure to do so could result in injury.

To reduce the risk of electrocution: Changes or modifications to this unit not expressly approved by the party responsible for compliance could cause damage to the machine and void the warranty. Only use the power supply provided by the manufacturer to operate the Paptizer 360.

Discontinue use of the Paptizer 360 and all its parts after 5 years. Dispose of the Paptizer 360 and its parts in accordance with local procedures for disposal of electronic equipment.

Keep out of reach of children. Failure to do so could result in injury.

The Paptizer 360 is intended for single patient in home use only. Exposure to electromagnetic radiation or interference outside of typical home settings may impact device performance.

For adult use only.

Tested for use with ResMed AirFit F20 masks only.

Symbol Glossary

Symbol	Title of Symbol	Meaning of Symbol	Standard	Reference Number
	Manufacturer	Indicates the medical device manufacturer.	ISO 15223-1 Medical Devices - Symbols to be used with medical device labels, labelling and information to be supplied.	5.1.1
SN	Serial Number	Indicates the manufacturer's serial number so that a specific medical device can be identified.	ISO 15223-1 Medical Devices - Symbols to be used with medical device labels, labelling and information to be supplied.	5.1.7
REF	Catalogue Number	Indicates the manufacturer's catalogue number so that the medical device can be identified.	ISO 15223-1 Medical Devices - Symbols to be used with medical device labels, labelling and and information to be supplied.	5.1.6
	Do not use if package is damaged and consult instructions for use	Indicates a medical device that should not be used if the package has been damaged or opened and that the user should consult the instructions for use for additional information.	ISO 15223-1 Medical Devices - Symbols to be used with medical device labels, labelling and and information to be supplied.	5.2.8
	Consult Instructions For Use	Indicates the need for the user to consult instructions for use.	ISO 15223-1 Medical Devices - Symbols to be used with medical device labels, labelling and and information to be supplied.	5.4.3
	Caution	Indicates the need for the user to consult instructions about warnings for proper use.	ISO 15223-1 Medical Devices - Symbols to be used with medical device labels, labelling and and information to be supplied.	5.4.4

Symbol Glossary

Symbol	Title of Symbol	Meaning of Symbol	Standard	Reference Number
	Date of Manufacture	Indicates the date when the medical device was manufactured.	ISO 15223-1 Medical Devices - Symbols to be used with medical device labels, labelling and information to be supplied.	5.1.3
#	Model Number	Indicates the model number or type number of a product.	ISO 15223-1 Medical Devices - Symbols to be used with medical device labels, labelling and and information to be supplied.	5.1.10
UDI	Unique Device Identifier	Indicates a carrier that contains a unique device identifier information.	ISO 15223-1 Medical Devices - Symbols to be used with medical device labels, labelling and and information to be supplied.	5.7.10
	Keep Dry	Indicates a medical device that needs to be protected from moisture.	ISO 15223-1 Medical Devices - Symbols to be used with medical device labels, labelling and and information to be supplied.	5.3.4

Paptizer 360

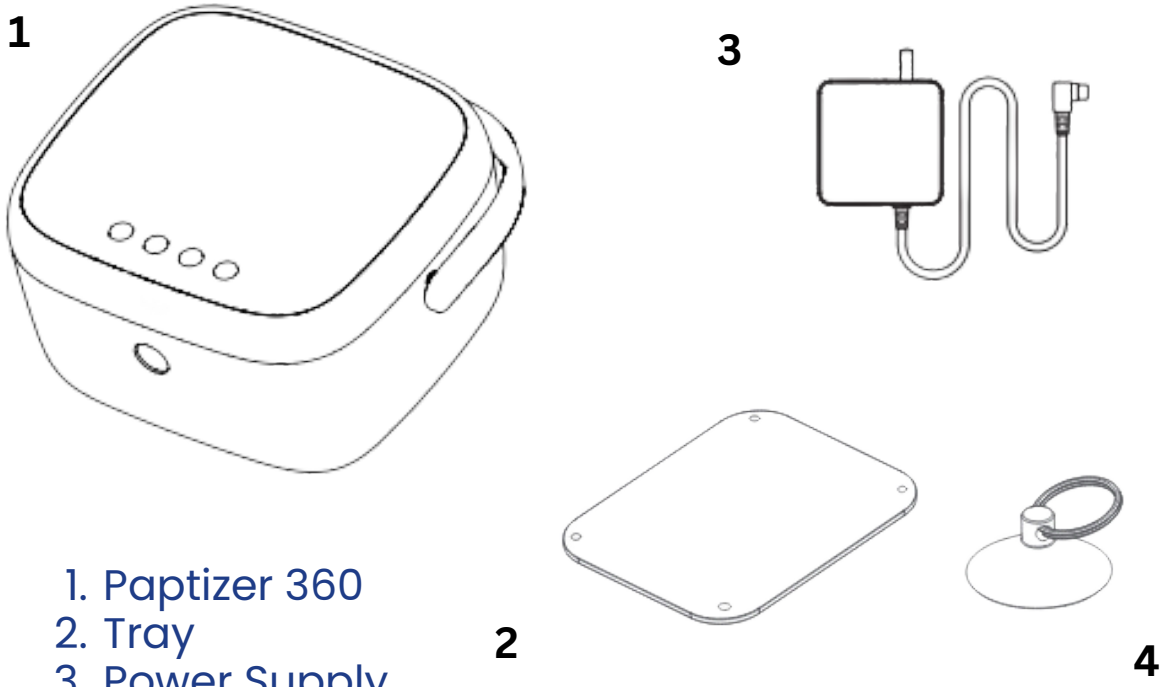

1. Paptizer 360
2. Tray
3. Power Supply
4. Suction for tray

LiViliti Health Products Corp is an independent company not affiliated with ResMed Inc. Names and associated trademarks are solely owned by the respective companies and manufacturers. Depictions of brand logos are for informational and educational purposes and are only used for customer equipment recognition.

The Paptizer 360 is compatible with ResMed AirFit F20 full face mask cushions. Follow all manufacturer guidelines for washing face masks. The Paptizer 360 is designed to supplement washing, not replace it. If any any visible deterioration of a mask cushion is apparent (cracking, crazing, tears, etc.), the mask cushion should be discarded and replaced. Slight discoloration of the silicone components may occur and is acceptable.

Cleaning The Paptizer 360

Caring for your Paptizer 360 is simple. If you notice any debris from products placed in the machine, use a clean, dry microfiber towel or paper towel to wipe and thoroughly clean the inside of the machine and tray. Run one sanitizing cycle with no items in the machine to ensure all space inside is sanitized.

Indications For Use

The Paptizer 360 device is intended to be used as an adjunct to reduce bacterial populations on certain compatible home use CPAP mask cushions after cleaning. An in vitro 2-log (99%) bacterial reduction by the Paptizer 360 has been demonstrated for the following bacteria: Staphylococcus epidermidis (ATCC#: 12228), Staphylococcus aureus (ATCC#: 6538), Klebsiella pneumoniae (ATCC#: 13883), and Pseudomonas aeruginosa (ATCC#: 15442/10145), Escherichia coli (ATCC#: 11229), and Streptococcus pyogenes (ATCC#: 14289) after a complete processing cycle. Any correlation between in vitro results and clinical outcome has not been established.

The Paptizer 360 device is an over-the-counter device for single patient home use. This device must not be used to replace the cleaning procedures as recommended by the CPAP mask manufacturers. The Paptizer 360 device has been tested for use with ResMed AirFit F20 (mask cushion only). The safe use of the Paptizer 360 device with any other respiratory devices or accessories, such as headgear, mask frame, and mask elbow, has not been established.

How To Use

1. **Place Paptizer 360 on a solid, flat surface with at least an inch of space between the back of the unit and the wall. Ensure the Paptizer 360 is placed in an area where it is easy to remove and attach the power supply. Plug the power supply into the port located on the back of the Paptizer 360. Plug the other end into a wall outlet.**

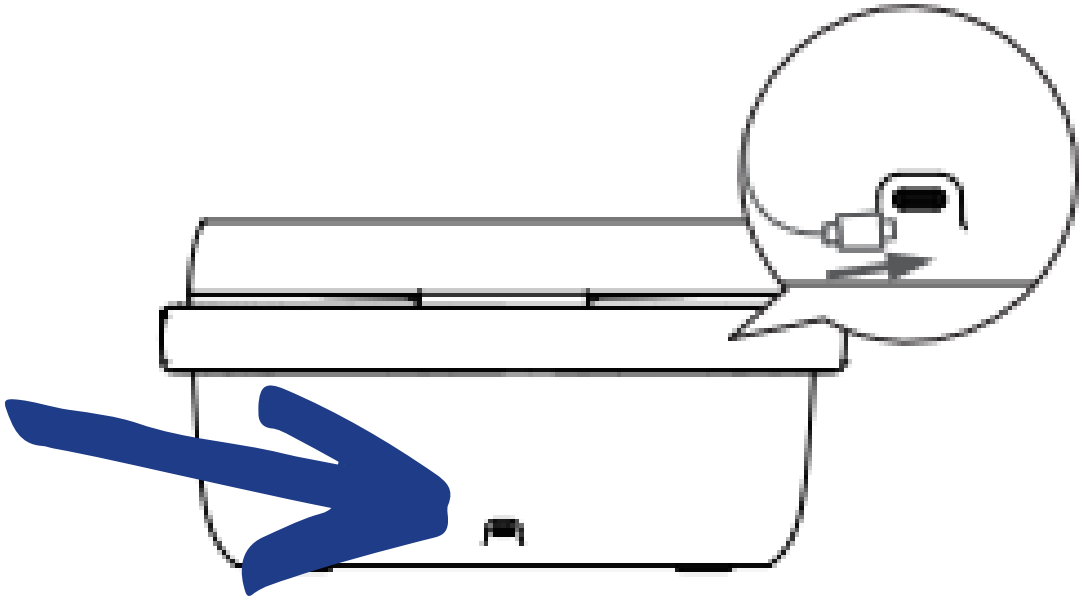

2. **Open the lid by pressing the OPEN button located on the front of the Paptizer 360.**

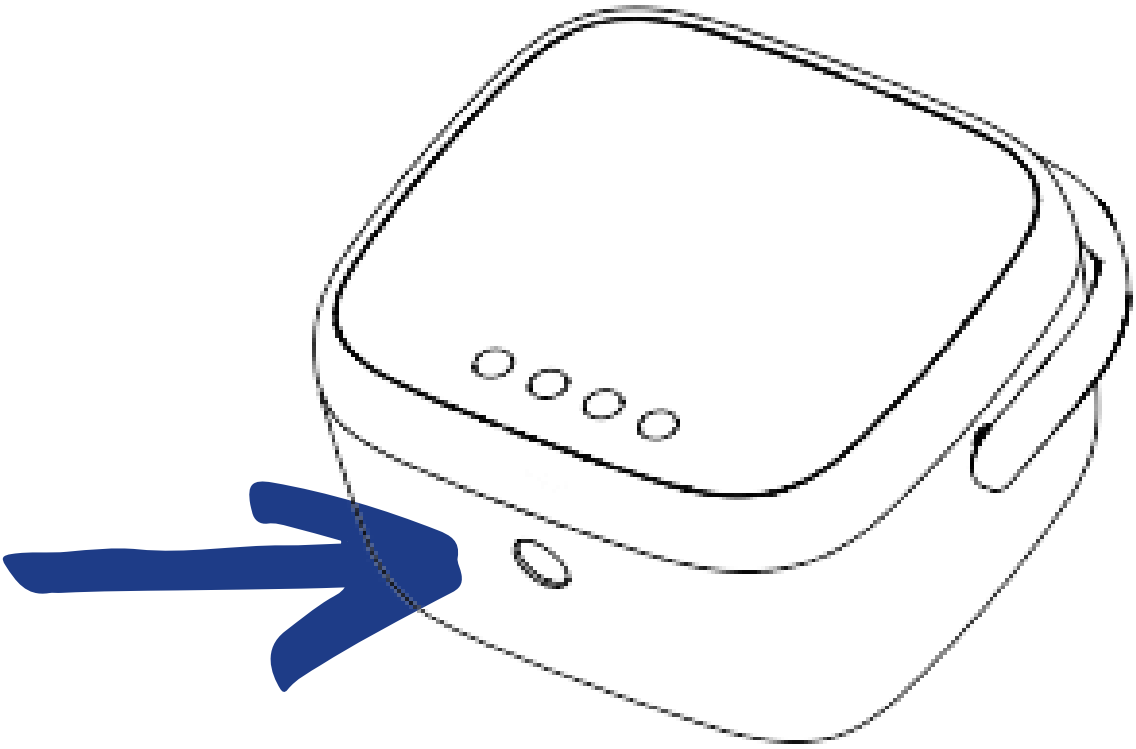

How To Use

3. **Place the suction on the top of the glass tray. Carefully place the crystal tray over the mirrored bottom of the device with the round legs on the bottom using one hand to hold the crystal tray steady and two fingers in the hook on the suction.**

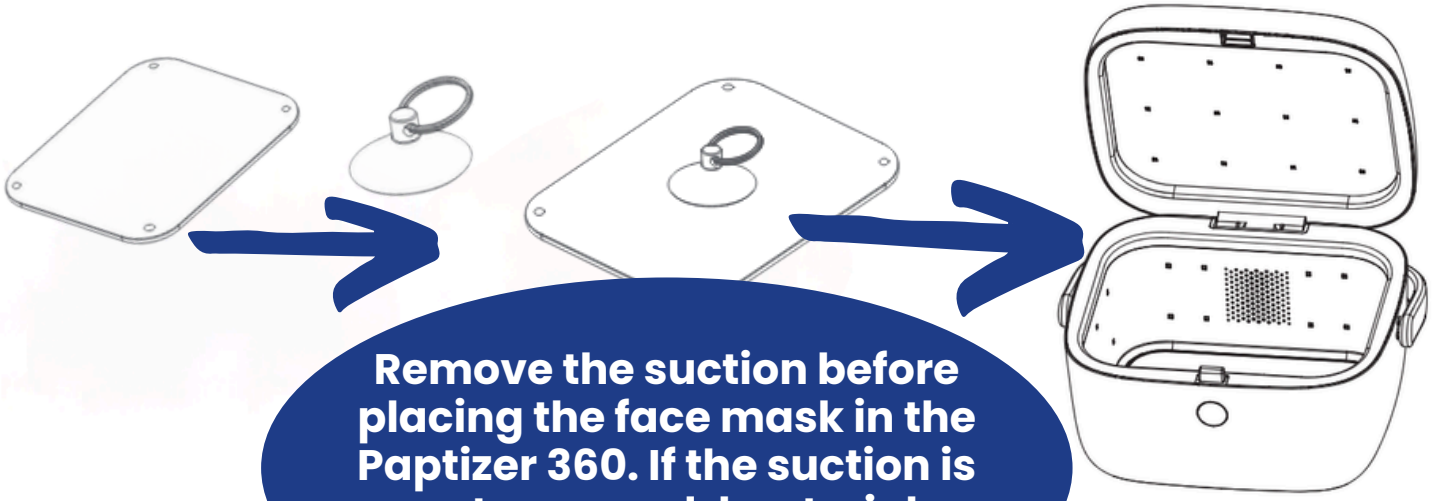

Remove the suction before placing the face mask in the Paptizer 360. If the suction is not removed, bacterial reduction may be impacted.

4. **Remove headgear and tubing from the mask. Follow manufacturer's instructions for washing. Place CPAP mask with silicone cushion/foam cushion facing upwards inside Paptizer 360 in the center of the crystal tray. *NOTE: Only one item should be placed in the Paptizer 360 at a time.***

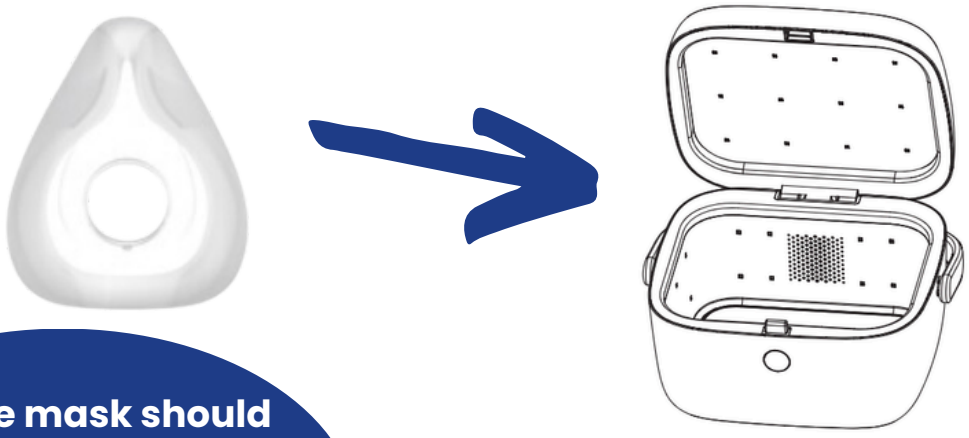

The face mask should be facing up in the Paptizer 360. If the face mask is not facing up, bacterial reduction may be impacted.

Only use **one AirFit F20 mask cushion** in the Paptizer 360 device at one time. Use of 2 or more cushions at one time may impact microbial reduction.

How To Use

Correct placement of CPAP Masks:

Incorrect placement of CPAP Masks:

How To Use

5. **Close the lid and press the ON button to power up the Paptizer 360. You will hear a single beep and see '000' on the LCD display.**

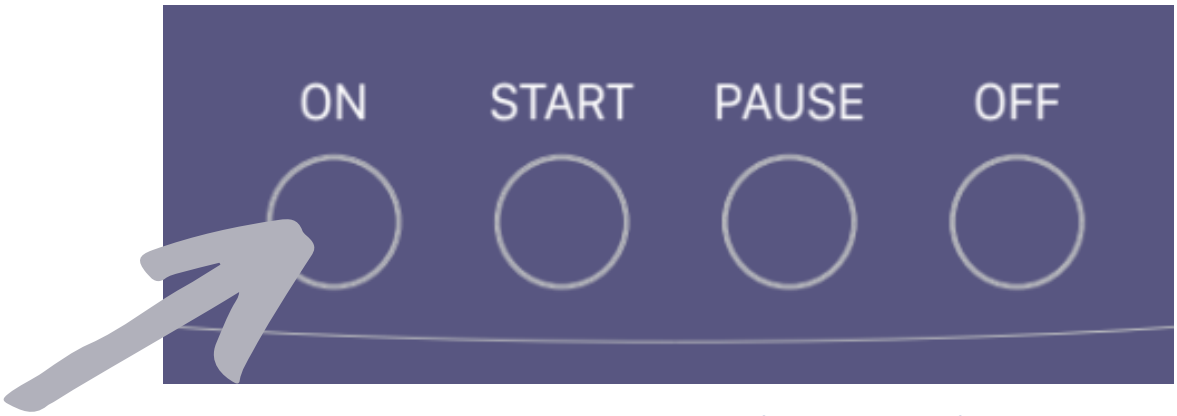

6. **Press the START button to begin a 30 minute bacterial reduction cycle. You will hear a single beep and see '30' on the LCD display.**

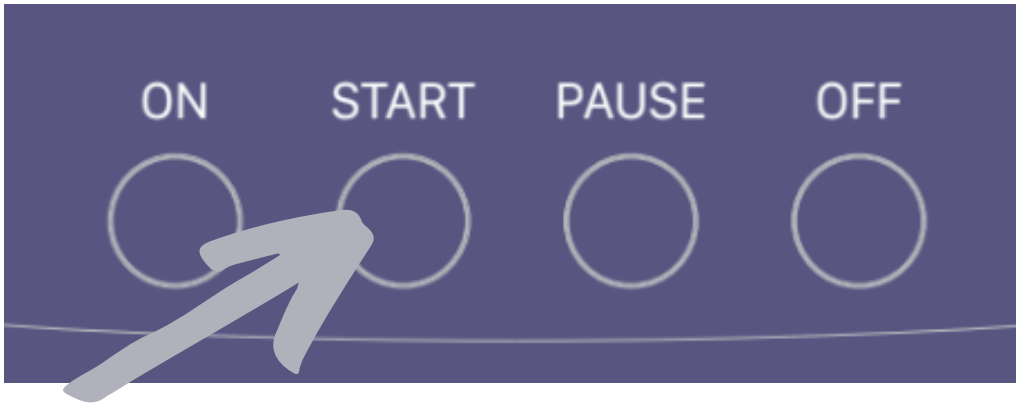

7. **Time remaining on cycle will be displayed above control buttons in minutes with a blinking line next to it to indicate the cycle is running. When cycle is complete, you will hear a single beep and see '000' on the LCD display.**

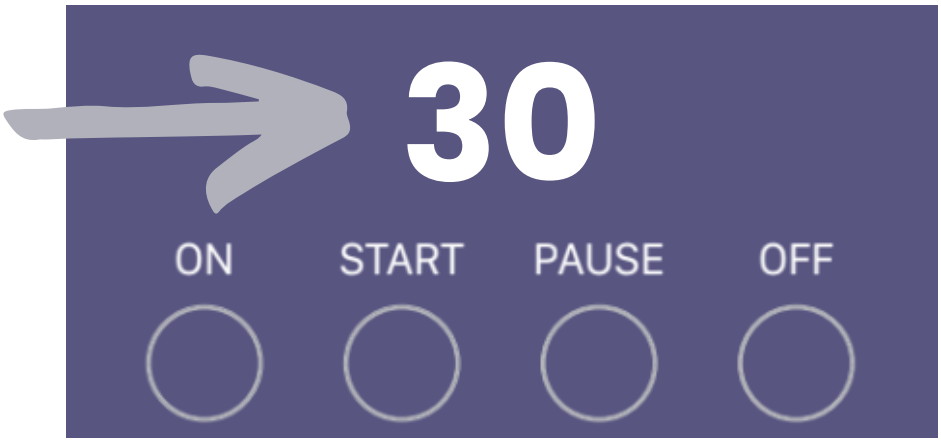

How To Use

8. **Once the 30 minute cycle is complete, press the OFF button and remove the mask from the Paptizer 360. You will hear a single beep when your press the OFF button. The machine will automatically shut off if not manually turned off.**

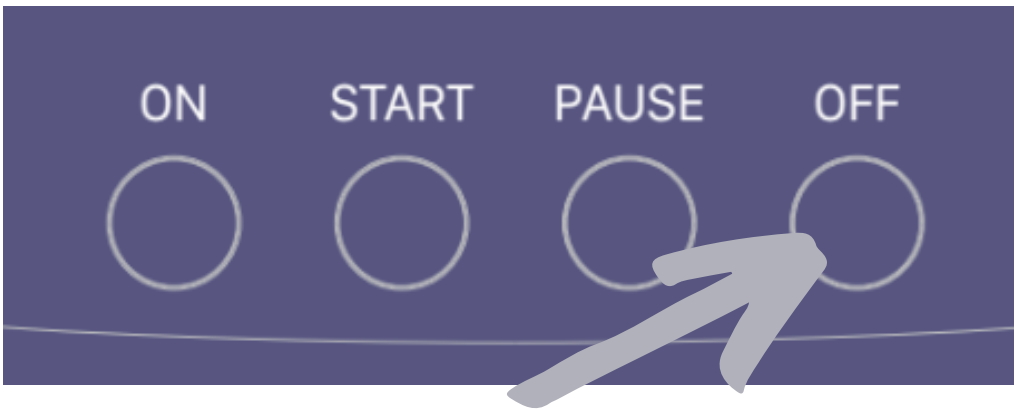

9. **If you need to stop the cycle before the cycle completes, press the PAUSE button to shut off the lights and pause the timer. You may open the lid once the timer pauses if you need to remove the item. The line next to the number will stop blinking while the cycle is paused. Pressing the PAUSE button once or START button twice after pausing will restart the 30 minute cycle. You will hear a single beep when pressing the PAUSE button.**

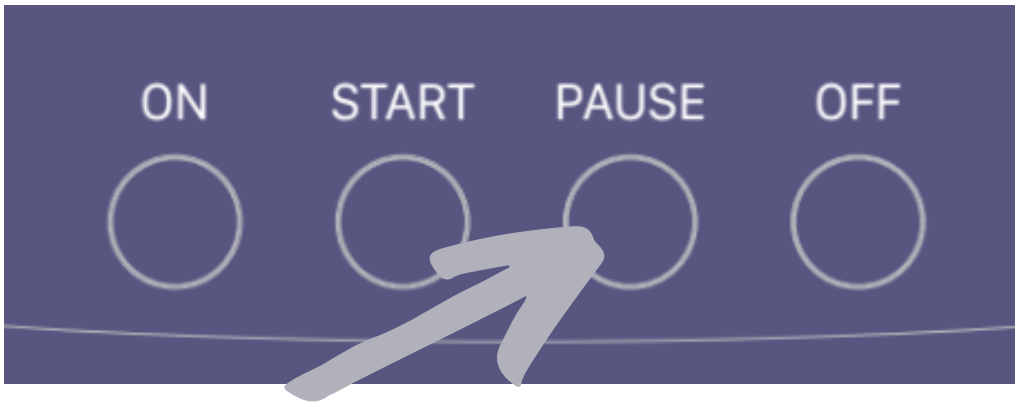

How To Use

Cycle Summary

START button: 30- minute bacterial reduction cycle. LCD timer will count down from 30 to 0.

PAUSE button: Stops cycle immediately.

Please keep the Paptizer 360 plugged in during the entire cycle.

Storing The Paptizer 360

Remove the mask from the Paptizer 360 and close the lid before storing it. Unplug the power supply when not in use.

Store the Paptizer 360 and its parts in a cool, dry environment and away from water.

Troubleshooting

If the machine will not turn on:

Ensure the power supply is plugged into the unit all the way. Make sure it is not loose in the port. Ensure that the wall outlet it is plugged into is working properly. Make sure that the power button gets pressed before you press the desired mode button.

If the machine does not light up when pressing the ON button:

Ensure the Paptizer 360 is connected to power properly. Unplug the unit, plug power supply back in, then turn on.

If the machine is dropped or otherwise physically damaged:

Contact customer service to report damage. Take pictures of any interior or exterior damage.

If the lights do not automatically turn off when the lid is opened during the sanitizing cycle:

Immediately close the lid and remove power from the Paptizer 360. Contact customer service to report the issue. Do not continue use.

Warranty

To register your warranty:

Visit www.liviliti.com/warranty and click on 'Warranty' OR scan the QR code:

Limited Warranties on the Paptizer 360 device

1. LiViliti warrants the Paptizer 360 device (except the quartz glass tray) against defects in materials and workmanship for a period of two (2) years from the date of purchase;
2. LiViliti warrants the quartz glass tray in the Paptizer 360 device against defects in materials and workmanship for a period of thirty (30) days from the date of purchase; and
3. when ResMed AirFit F20 mask cushions are reprocessed using the Paptizer 360 device in accordance with the Paptizer 360 Instructions for Use, LiViliti provides a limited warranty covering the functional integrity of the mask cushions for a duration up to the manufacturer's labeled shelf life of the mask cushion. This limited warranty applies solely to degradation directly caused by the Paptizer 360 reprocessing process. This limited warranty applies only if:
   - the Paptizer 360 device is used strictly according to its cleared indications, instructions, and cycle parameters;
   - the mask cushion is used, maintained, stored, and handled in accordance with the manufacturer's instructions, except with respect to limitations on ultraviolet exposure resulting from use of the Paptizer 360 device; and
   - the mask cushion has not been damaged due to misuse, improper handling, or outside intended conditions.

These limited warranties give you specific legal rights and you may also have other rights, which vary from state to state.

Limited Warranty Exclusions

These limited warranties do not cover cosmetic changes that do not materially affect performance. Also, these limited warranties do not cover any damage due to:

- normal wear and tear;
- improper storage, handling, maintenance, cleaning, or use;
- use with non-compatible devices;
- damage caused by accident, misuse, abuse, alteration, modification, or unauthorized repair; or
- failure to follow the product instructions.

Exclusive Limited Warranty Remedy

If LiViliti determines that a product fails to conform to this limited warranty, LiViliti's sole obligation, and the purchaser's sole and exclusive remedy, shall be repair or replacement of the affected product, or a substantially equivalent product, at LiViliti's discretion. LiViliti will also pay for shipping and handling fees to return the repaired or replacement.

For replacement products, coverage shall continue only for the remainder of the original applicable warranty period.

These limited warranties only extend to the consumer who originally purchased the product. It does not extend to any subsequent owner or other transferee of the product.

We limit the duration and remedies of all implied warranties, including without limitation the warranties of merchantability and fitness for a particular purpose to the duration of this express limited warranty. Some states do not allow limitations on how long an implied warranty lasts, so the above limitation may not apply to you.

Limitation of Liability

THE REMEDIES DESCRIBED ABOVE ARE THE SOLE AND EXCLUSIVE REMEDIES AND LIVILITI'S ENTIRE LIABILITY FOR ANY BREACH OF THESE LIMITED WARRANTIES.

TO THE MAXIMUM EXTENT PERMITTED BY LAW, LIVILITI SHALL NOT BE LIABLE FOR ANY INDIRECT, INCIDENTAL, SPECIAL, CONSEQUENTIAL, EXEMPLARY, OR PUNITIVE DAMAGES, INCLUDING LOST PROFITS, LOST REVENUE, LOSS OF USE, LOSS OF GOODWILL, BUSINESS INTERRUPTION, PERSONAL INJURY CLAIMS, OR THIRD-PARTY CLAIMS ARISING FROM OR RELATED TO THE USE OF THE PAPTIZER 360 DEVICE OR THIS WARRANTY. SOME STATES DO NOT ALLOW THE EXCLUSION OR LIMITATION OF INCIDENTAL OR CONSEQUENTIAL DAMAGES, SO THE ABOVE LIMITATION OR EXCLUSION MAY NOT APPLY TO YOU. LIVILITI'S TOTAL AGGREGATE LIABILITY ARISING OUT OF OR RELATING TO THIS WARRANTY SHALL NOT EXCEED THE ORIGINAL PURCHASE PRICE PAID FOR THE PRODUCT GIVING RISE TO THE CLAIM.

Warranty Service

To obtain warranty service, you must call LiViliti Customer Service at 888-987-0744 during the warranty period to obtain return instructions. No warranty service will be provided without first contacting LiViliti.

Technical Specifications

Product name: Paptizer 360

Input: 18V/1.5A

Power rating: 27W

Input Interface: Type C USB

UVC LED Quantity: 40 UVC LED

UV Lifespan: Up to 10,000 hours

UVC LED Wavelength: 260-280 nm

Operating Temperature: 41 to 104°F / +5 to +40°C

Storage Temperature: -13 to 158°F / -25 to +70°C

Humidity: 15-90%

Emissions and Immunity: Tested to Group 1, Class B limits

Dimensions: 11.89" x 10.59" x 6.06" / 302 x 269 x 154 mm

Weight: 4.975 lbs. (Paptizer 360 + quartz glass plate)
4.069 lbs. (Paptizer 360 only)
0.906 lbs. (quartz glass plate only)

<u>*WARNING*</u>: Portable RF communications equipment (including peripherals such as antenna cables and external antennas) should be used no closer than 30cm (12 inches) to any part of the Paptizer 360, including cables specified by the manufacturer. Otherwise, degradation of the performance of this equipment could result.

Electromagnetic Emissions

Emissions Test	**Compliance**
RF emissions CISPR 11	Group 1
RF emissions CISPR 11	Class B
Harmonic emissionsIEC 61000-3-2	Complies
Voltage FluctuationsIEC 61000-3-3	Complies

Electromagnetic Immunity

Immunity Test	IEC 60601 test and Compliancelevel
Electrostatic Discharge (ESD)IEC 61000-4-2	+/- 8kV contact+/- 15kV air
Electrical fast transient/burstIEC 61000-4-4	+/- 2kV for power supply lines
SurgeIEC 61000-4-5	+/- 1kV live to neutral+/- 2kV line(s) to earth
Voltage dips, short interruptions,and voltage variations on powersupply input linesIEC 61000-4-11	0%UT; 0.5 cycle at 0°, 45°, 90°,135°, 180°, 225°, 270°, and 315°0%UT; 1 cycle at 0°70%UT; 25/30 cycle at 0°0%UT; 250/300 cycle
Power Frequency (50/60Hz)magnetic fieldIEC 61000-4-8	30 A/m
Conducted RFIEC 61000-4-6	3Vrms0.15-80 MHz6Vrms in ISM and amateur radiobands between 0.15 and 80 MHz
Radiated RFIEC 61000-4-3	10V/m80MHz to 2.7GHz
Proximity magnetic fields immunityIEC 61000-4-39	8 A/m at 30kHz65 A/m at 134.2kHz7.5 A/m at 13.56MHz

Paptizer 360 complies with Immunity to proximity field from RF wireless communications equipment as specified in Table 9 of IEC 60601-1-2.

Test Frequency(MHz)	Banda (MHz)	Servicea	Modulationb	Test Level(V/m)
385	380-390	TETRA 400	Pulse modulationb 18Hz	27
450	430-470	GMRS 460, FRS 460	FMc +/-5 kHz deviation 1kHz sine	28
710	704-787	LTE Band 13, 17	Pulse modulationb 217Hz	9
745				
780				
810	800-960	GSM 800/900, TETRA 800, iDEN 820, CDMA 850, LTE Band 5	Pulse modulationb 18Hz	28
870				
930				
1720	1700-1990	GSM 1800; CDMA 1900; GSM 1900; DECT; LTE Band 1, 3, 4, 25; UMTS	Pulse modulationb 217Hz	28
1845				
1970				
2450	2400-2570	GSM 1800; CDMA 1900; GSM 1900; DECT; LTE Band 1, 3, 4, 25; UMTS	Pulse modulationb 217Hz	28
5240	5100-5800	WLAN 802.11 a/n	Pulse modulationb 217Hz	9
550				

5785				

NOTE: If necessary to achieve the IMMUNITY TEST LEVEL, the distance between the transmitting antenna and the ME EQUIPMENT or ME SYSTEM may be reduced to 1m. The 1m test distance is permitted by IEC 61000-4-3.

(a) For some services, only the uplink frequencies are included.

(b) The carrier shall be modulated using a 50% duty cycle square wave signal.

(c) As an alternative to FM modulation, 50% pulse modulation at 18 Hz may be used because while it does not represent actual modulation, it would be worst case.

Customer Service

If you need additional support using the device or want to report a malfunction, please contact customer support::

888-987-0744
info@liviliti.com
www.liviliti.com

Manufactured for LiViliti Health Products
1680 Fruitville Rd
Unit 557
Sarasota, FL 34236

FCC NOTICE:
This device complies with part 15 of the FCC rules. Operation is subject to the following two conditions: (1) This device may not cause harmful interference, and (2) this device must accept any interference received, including interference that may cause undesired operation. NOTE: "Harmful interference" is defined in 47 CFR §2.1 by the FCC as follows: Interference which endangers the functioning of a radionavigation service or of other safety services or seriously degrades, obstructs, or repeatedly interrupts a radio communication service operating in accordance with the [ITU] Radio Regulations. NOTE: This equipment has been tested and found to comply with the limits for a class B digital device, pursuant to part 15 of the FCC rules. These limits are designed to provide reasonable protection against harmful interference in a residential installation. This equipment generates, uses, and can radiate radio frequency energy and, if not installed and used in accordance with the instructions, may cause harmful interference to radio communications. However, there is no guarantee that interference will not occur in a particular installation. If this equipment does cause harmful interference to radio or television reception, which can be determined by turning the equipment off and on, the user is encouraged to try to correct the interference by one or more of the measures located on the troubleshooting page of this user manual or contacting customer service immediately.

Manufacturer:
Shenzhen UVLED Optical Technology Co. Ltd.
Address: Room 301, FL 3, Phase 1, Bangkai Science and Technology Park, West of Bangkai Road & South of Guanguang Road, Guangming Hi-tech Industrial Zone, Tangjia Community, Phoenix Street Admin, Guangming District, Shenzhen, China
ZHONGSHAN SUNCLEAN CO. LTD
Address: F/S, F/6 #1, F/7, F/8 #2 & F/9, Building G, NO 3 of Huanzhen North 13 RD, Henglan Town, Zhongshan Guangdong, China